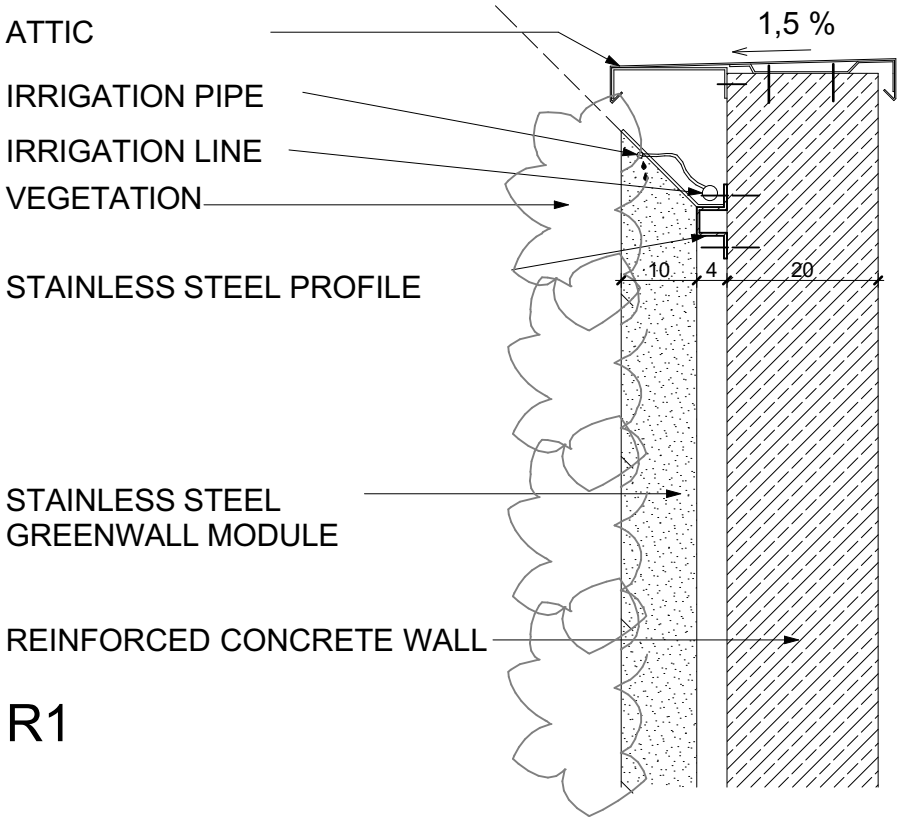
ATTIC
IRRIGATION PIPE
IRRIGATION LINE
VEGETATION
STAINLESS STEEL PROFILE
STAINLESS STEEL
GREENWALL MODULE
REINFORCED CONCRETE WALL
1,5 %
10
4
20

R1